KURVALF
Pipeline Valves

Undergroud
Pipeline Valves

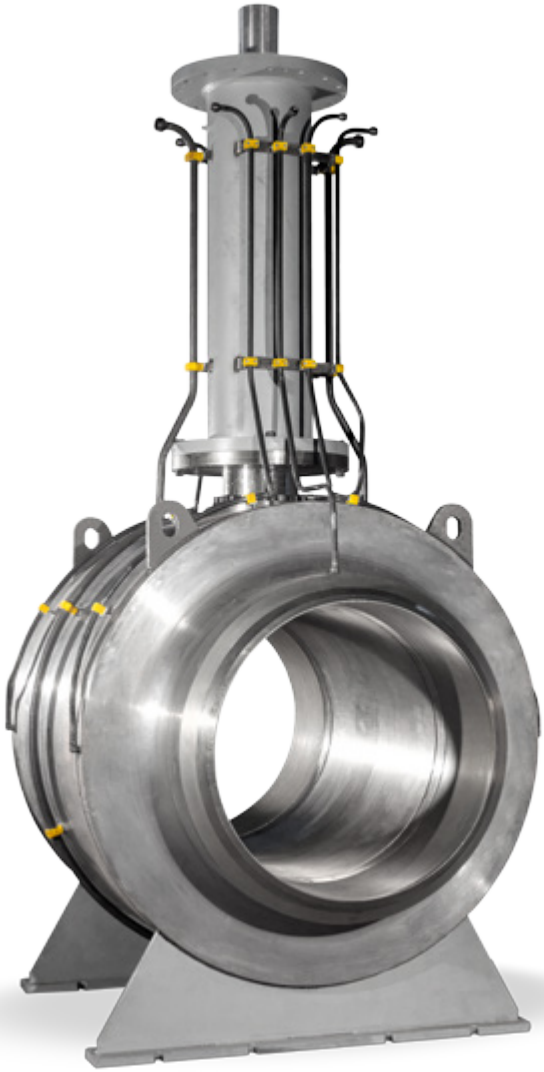

UNDERGROUND PIPELINE VALVES

Where to use

- On/Off Shore Oil and Gas Production
- Oil and Gas Storage
- Oil and Gas Transportation
- Oil and Gas Gathering Systems
- Gas Re-injection Plants
- Gas Treatment Plants
- Petrochemical Industry
- Metering Systems
- Refining Industry
- City Lines

Fully welded ball valves are used at pipelines for their strength and low maintenance purpose and prefered mostly for underground and aboveground applications. Their design allows lightweight structure and leakage resistance at optimum level.

FEATURES	
Valve Sizes :	2" - 42"
Operation :	See page 4
Pressure Class :	ANSI 150 / 300 / 600 / 900
End Connections :	BW
STANDARDS	
Valves Desing Standart :	ISO 17292 , API 6D, ISO 14313
Face To Face Std :	ANSI B16.10
End Connection :	ANSI B16.5 / ANSI B.16.25 / DIN EN 1092-1
Testing :	API 6D / API 598
Fire safe testing :	API 607 / ISO 10497 / API 6FA
Certificate Acc to :	10204 3.1 - 3.2

PART LIST

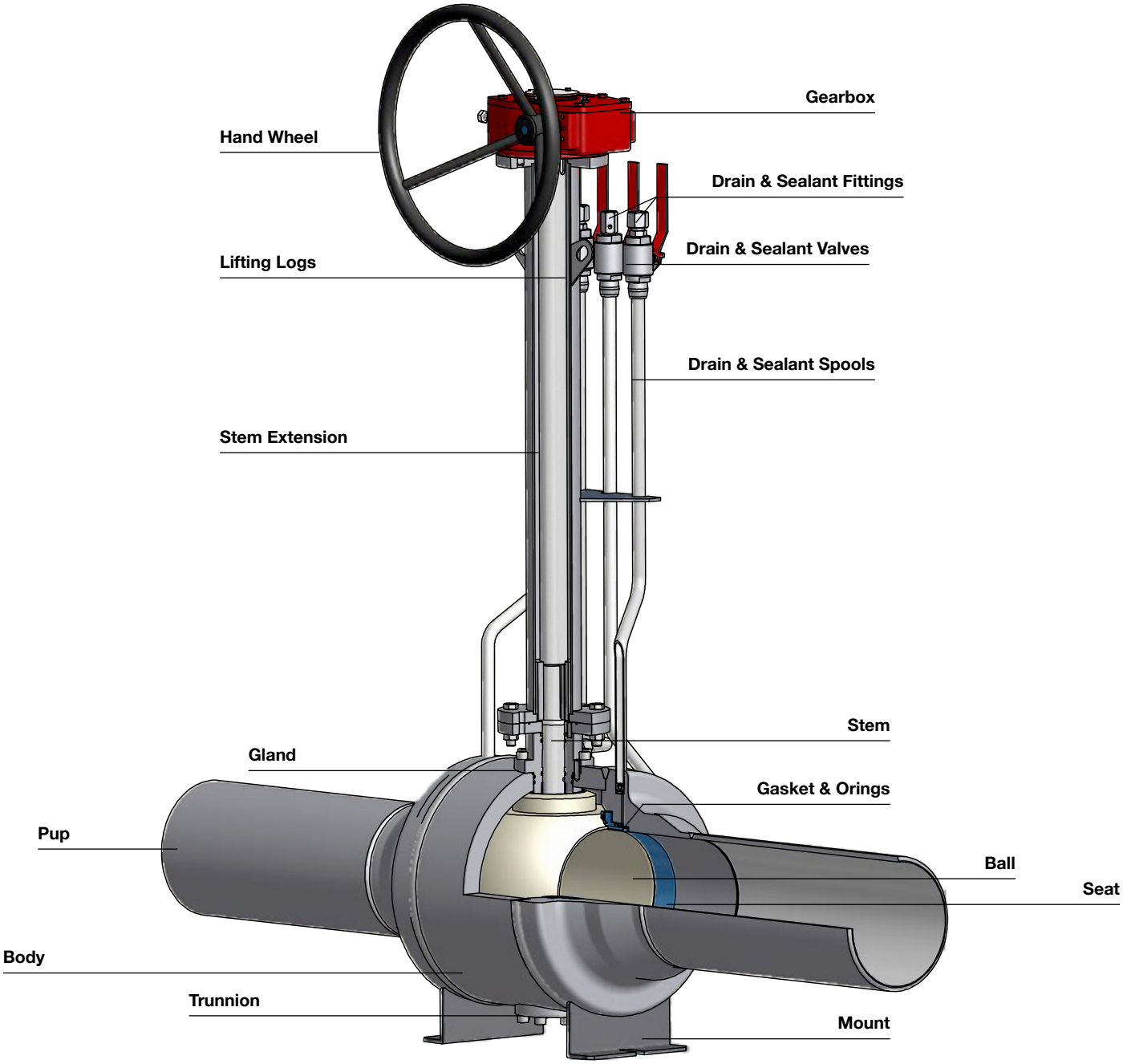

ITEM	PART NAME	Natural Gas Hydrocarbons	Low Temperature	Sour Service
1	Body	ASTM A105	A 350 LF2 / LF6	ASTM A105 / A 350 LF2
2	Ball	ASTM A105	ASTM A105 / A 350 LF2	ASTM A105 / A 350 LF2
3	Seat	ASTM A105	ASTM A105 / A 350 LF2	ASTM A105 / A 350 LF2
4	Trunnion	ASTM A105	A 350 LF2 / LF6	ASTM A105 / A 350 LF2
5	Gland	ASTM A105	A 350 LF2 / LF6	ASTM A105 / A 350 LF2
6	Stem	ASTM A105 / AISI 4140	AISI 4140 / Cr13	AISI 4140 / Cr13
7	Pups	ACC TO COSTUMER SPEC.	ACC TO COSTUMER SPEC.	ACC TO COSTUMER SPEC.
8	Gaskets	NBR / GRAPHİTE	HNBR / GRAPHİTE	ACC TO COSTUMER SPEC.
9	Stem Ex	ASTM A105 / AISI 4140	AISI 4140 / Cr13	AISI 4140 / Cr13
10	Drain Sealant Spools	API 5L or A106 GR b	API 5L or A106 GR b	API 5L or A106 GR b
11	Drain Valves	ACC TO 17292	ACC TO 17292	ACC TO 17292
12	Drain Fittings	Carbon Stell or stenless stell	Carbon Stell or stenless stell	Carbon Stell or stenless stell

For futher material application options, please consult us directly

OPERATION OPTIONS

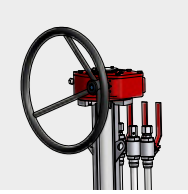
Gear

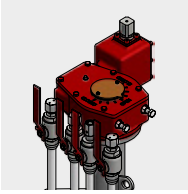
Top Gear

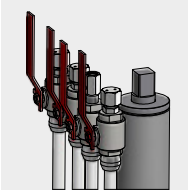
T-Key

Actuator Electric

Actuator Pneumatic

Actuator Hydraulic

SEAT APPLICATIONS

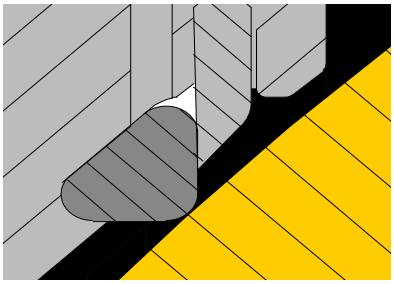
- Seat
- Ball
- Seat Insert

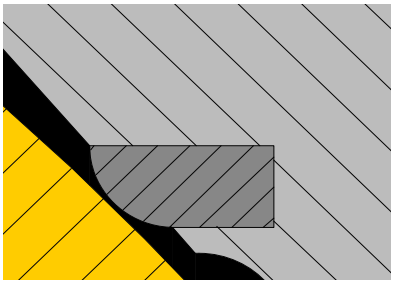
- Seat
- Ball
- Seat Insert

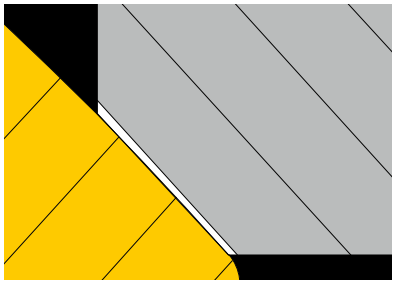
- Seat
- Ball surface plating with
- 150 micron TCC.

* For futher material application options, please consult us directly

FIRE SAFE SEAT DESIGN

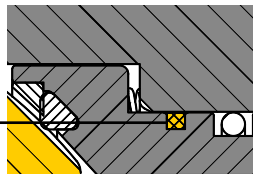

ANALYSIS

All valve designs, have been asset stress analysis to ensure pressure contained parts performance before manufacturing process.

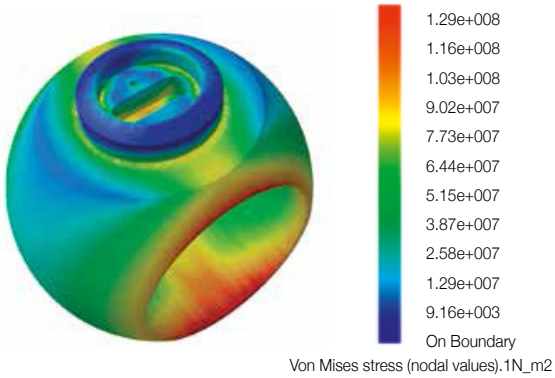

API 6D - Leak Test Table

	HYDROSTATIC SEMI OPEN BODY TEST (Working pressure x 1,5)		HYDROSTATIC SEAT TEST (Working pressure x 1,1)		PNEUMATIC SEAT TEST	
	pressure	time	pressure	time	pressure	time
ANSI 150 Working pressure 20 bar	30 bar	Depends on nominal diameter	22 bar	Depends on nominal diameter	6 bar	Depends on nominal diameter
ANSI 300 Working pressure 51 bar	76 bar		57 bar		6 bar	
ANSI 600 Working pressure 102 bar	153 bar		113 bar		6 bar	
ANSI 900 Working pressure 140 bar	210 bar		154 bar		6 bar	
DN 15 - 100 (1/2 - 4)	30-76-153-210 bar	2 min	22-57-113-154 bar	2 min	6 bar	2 min
DN 150 - 250 (6 - 10)	30-76-153-210 bar	5 min	22-57-113-154 bar	5 min	6 bar	5 min
DN 300 - 450 (12 - 18)	30-76-153-210 bar	15 min				
DN 500 and bigger	30-76-153-210 bar	30 min				

TECHNICAL DIMENSION

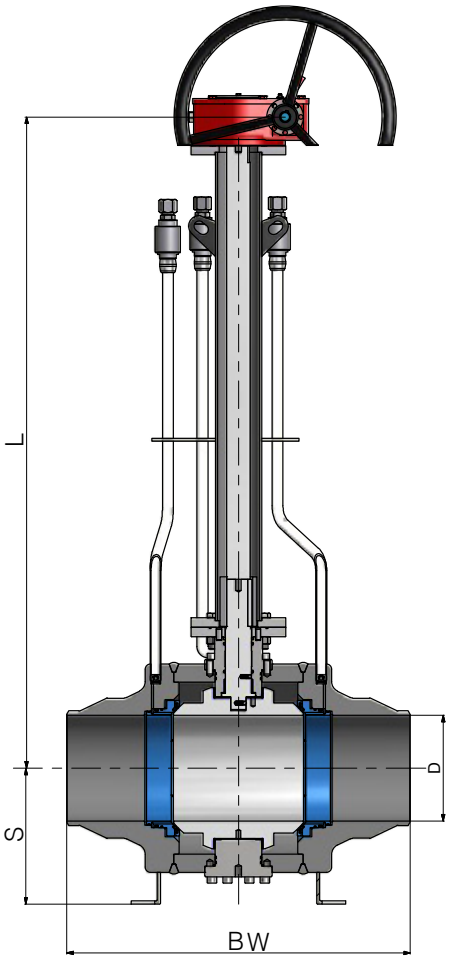

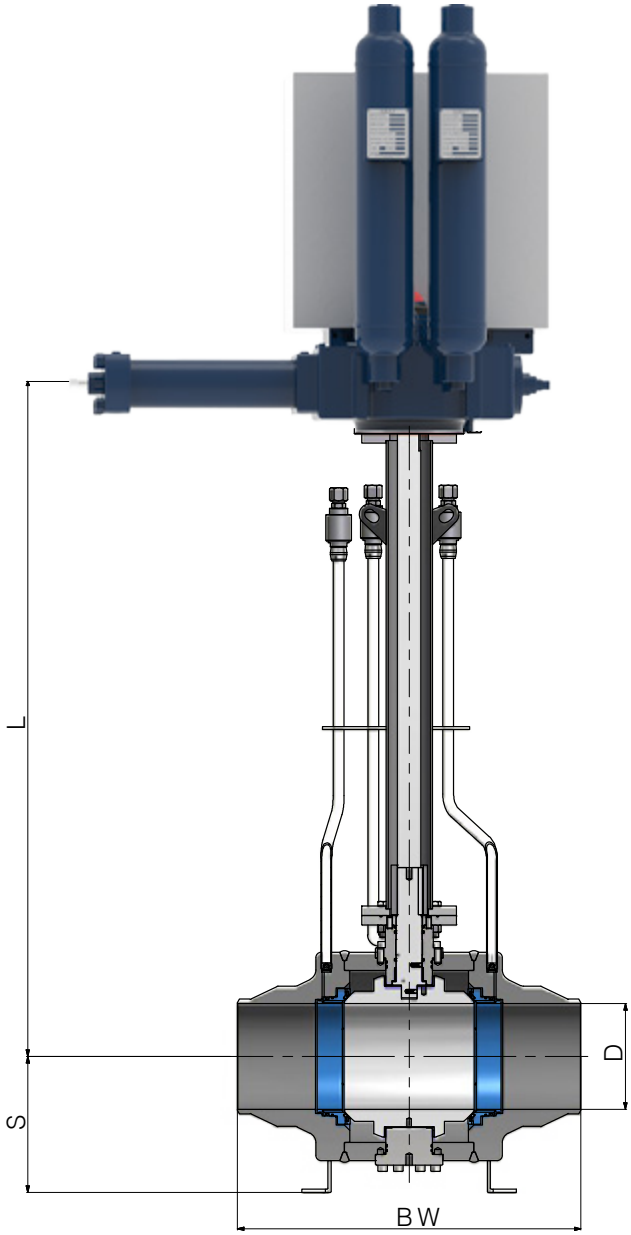

CLASS 150

ANSI150	BW	D	S	L
2”	216	50	-	This dimension defined by the costumer.
3”	283	76	-	
4”	305	102	-	
6”	457	152	216	
8”	521	203	276	
10”	559	254	307,5	
12”	635	305	333,5	
14”	762	337	382	
16”	838	387	416	
18”	914	438	535	
20”	991	489	550	
24”	1143	590	695	
26”	1245	635	700	
28”	1346	686	710	
30”	1397	737	735	
32”	1524	781	735	
34”	1626	830	750	
36”	1727	876	750	
40”	2032	976	1022	
42”	(C)	1020	1100	

CLASS 300

ANSI150	BW	D	S	L
2”	216	50	-	This dimension defined by the costumer.
3”	283	76	-	
4”	305	102	-	
6”	457	152	232	
8”	521	203	289	
10”	559	254	307,5	
12”	635	305	333,5	
14”	762	337	382	
16”	838	387	433	
18”	914	438	535	
20”	991	489	550	
22”	1092	538	695	
24”	1143	590	695	
26”	1245	635	700	
28”	1346	686	710	
30”	1397	737	735	
32”	1524	781	735	
34”	1626	830	750	
36”	1727	876	750	
40”	2032	976	1022	
42”	(C)	1020	1100	

CLASS 600

ANSI150	BW	D	S	L
2”	292	50	-	This dimension defined by the costumer.
3”	356	76	-	
4”	432	102	-	
6”	559	152	226	
8”	660	203	289	
10”	788	254	307,5	
12”	838	305	333,5	
14”	889	337	382	
16”	991	387	433	
18”	1092	438	535	
20”	1194	489	550	
22”	1295	538	600	
24”	1397	590	663	
26”	1448	635	700	
28”	1549	686	710	
30”	1651	735	735	
32”	1778	781	735	
34”	1930	830	750	
36”	2083	876	750	
40”	2032	976	1022	
42”	(C)	1020	1100	

CLASS 900

ANSI150	BW	D	S	L
2”	292	50	-	This dimension defined by the costumer.
3”	356	76	-	
4”	432	102	-	
6”	559	152	226	
8”	660	203	289	
10”	788	254	307,5	
12”	838	305	333,5	
14”	889	337	382	
16”	991	387	433	
18”	1092	438	535	
20”	1194	489	550	
24”	1397	590	663	

Dimensions are in mm.

DESIGN FEATURES

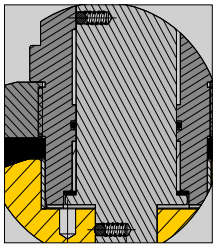

ANTISTATIC DEVICE

Spring plus graphite type antistatic device are applied between the ball, stem, gland flange and body, to keep the electical continuity between all the metalic components, and ensure the resistance lower then the most severe service requirement.

BLOW-OUT PROOF STEM

This design ensures the valve stem cannot blown out of the body in the event of the gland being removed while the valve is under pressure. To prevent stem blow out from body, the stem has a shoulder in the lower part and so constructs that it may not blow out upwards.

SINGLE PISTON EFFECT

This type of seat design can ensure a tight contact with the ball in only single direction.In fact, when the line (so the valve) is under pressure (upstream), the seat is pushed towards the ball naturally.It is called single piston effect due to one side seat ring pushed towards the ball.

DOUBLE PISTON EFFECT

As the name of it indicates, this type of seat design towards a tight contact with the ball in the normal direction, and also in the reverse direction.So, both sides upstream and downstream can be sealed for better leakage proof.Its design also allows to use body cavity pressure to push downstream side ring toward the ball also.It is called double piston effect due to both sides seat rings pushed towards the ball.

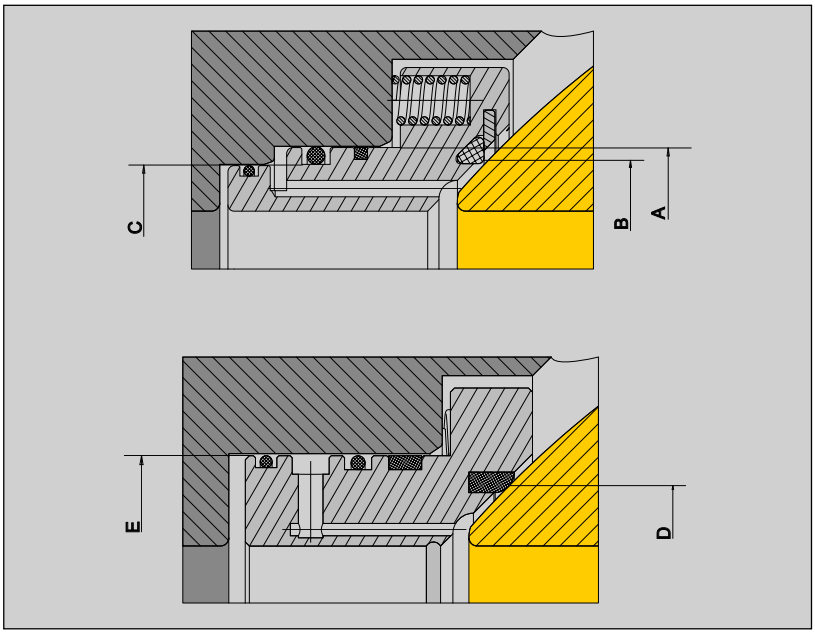

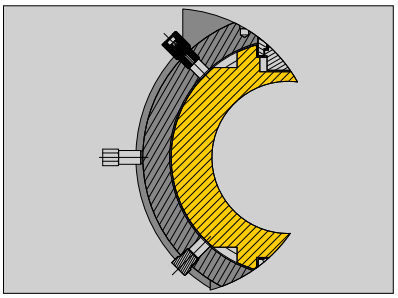

DOUBLE BLOCK and BLEED

When the ball is in the closed position, each seat seals off the process medium independently at the same time between the up/down stream and body cavity; it allows bleeding of the trapped cavity pressure (DBB) through drain or vent valve. The double block and bleed function makes it possible to flush the valve under pressure and verifies that the seats are sealing properly.

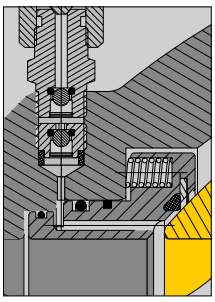

EMERGENCY SEAT SEAL

In the event of damage to the valve seat, sealant can be injected to temporarily seal the valve until maintenance can be performed. It provides high integrity shutoff. On request, secondary seat sealant injection fittings are installed.

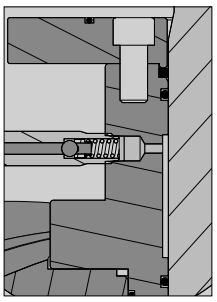

STEM SEAL

For high pressure or large size valves, double o-rings located in the upper stem area are used to ensure positive sealing. And upon request, additional stem seal injection fittings are provided to be utilized in the case of emergencies, o-ring damage, or if stem leakage occurs.

KURVALF Pipeline Valves

Kurvalf Makina Sanayi ve Ticaret Ltd. Şti.
Çınarlık Cad. No:8 16235 Çalı, BURSA / TÜRKİYE
+90 (224) 482 46 97 - pbx
+90 (224) 482 46 99
kurvalf@kurvalf.com
www.kurvalf.com